HFG430D

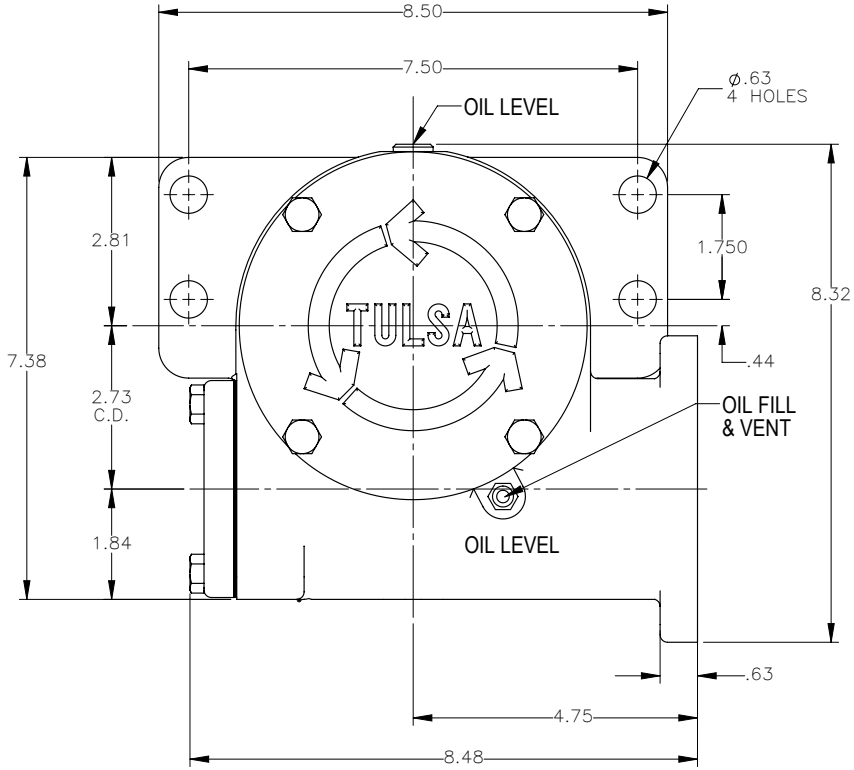

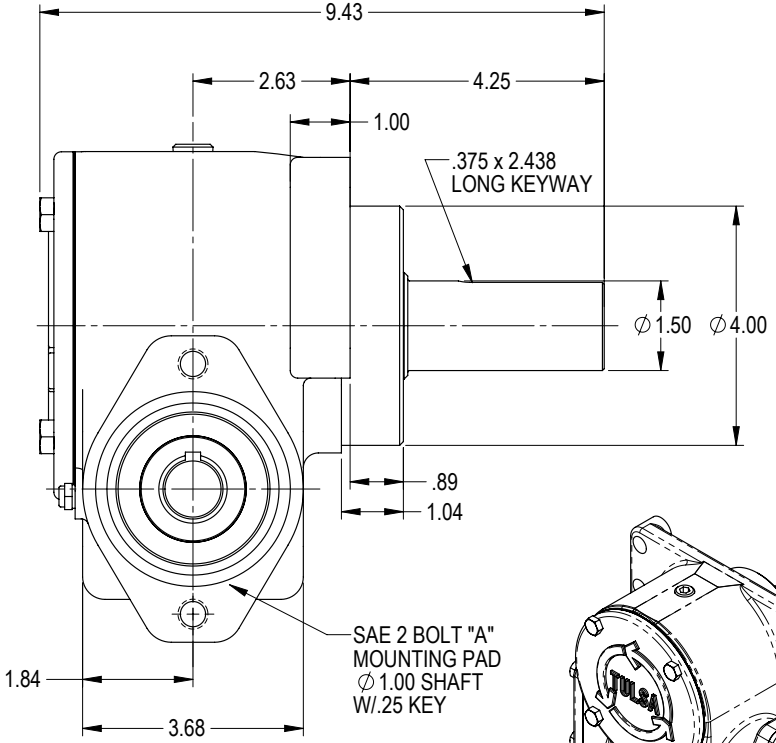

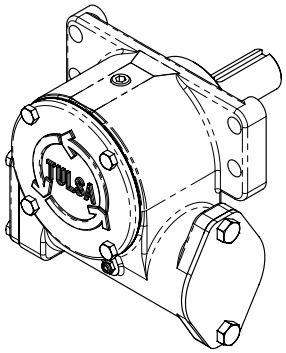

SPEED REDUCER
PERFORMANCE INFORMATION

GEAR RATIO	30:1
OUTPUT TORQUE (IN-LBS)	6,000
MAX. INPUT TORQUE (IN-LBS)	581.4 (STATIC)
MAX INPUT SPEED (RPM)	1,200
EFFICIENCY	
STATIC	34.4%
DYNAMIC	51.3%
INSTALLED WEIGHT (APPR)	42 LBS
LUBRICATION	EP-140

PART #: 81095

HFG900D

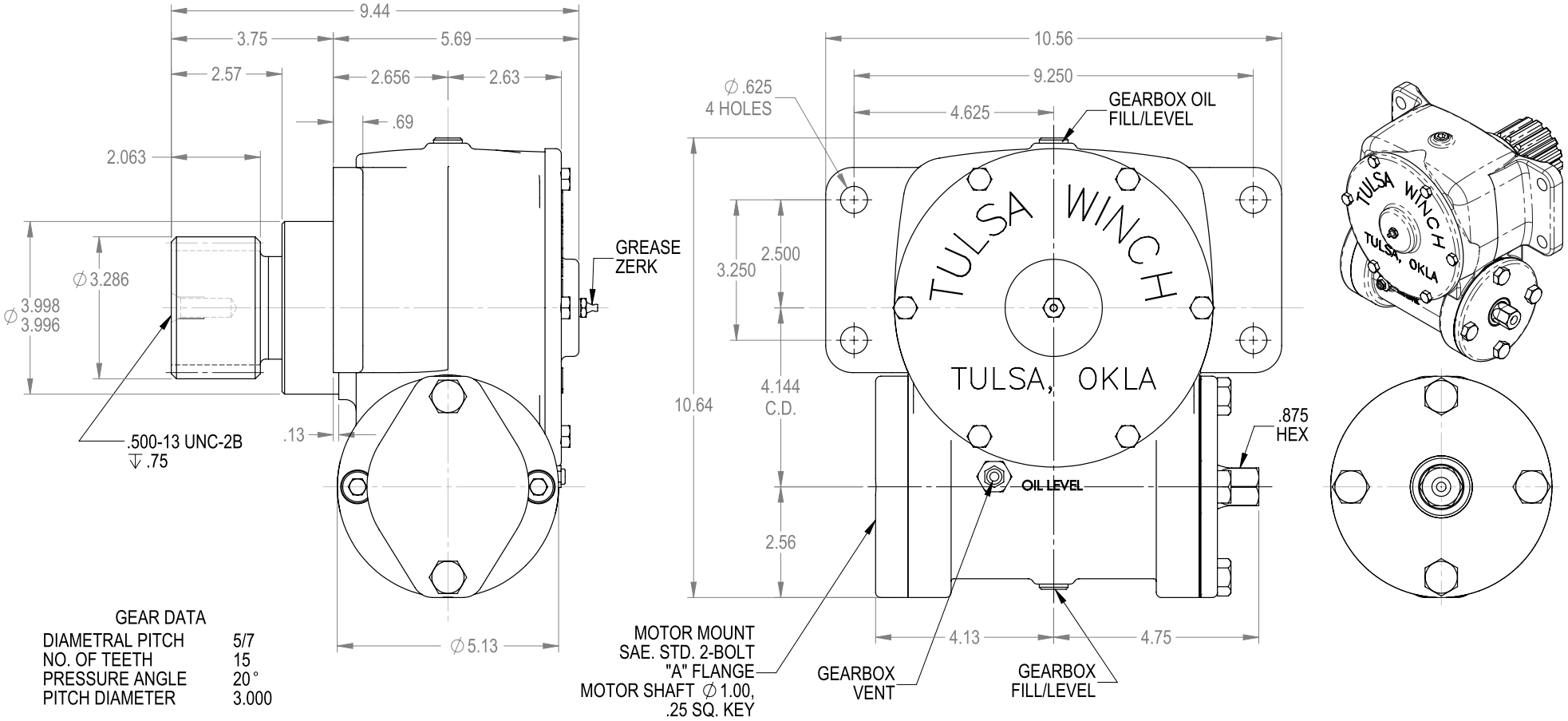

GEAR DATA

DIAMETRAL PITCH	5/7
NO. OF TEETH	15
PRESSURE ANGLE	20°
PITCH DIAMETER	3.000

PART #: 82188

HFG1642D

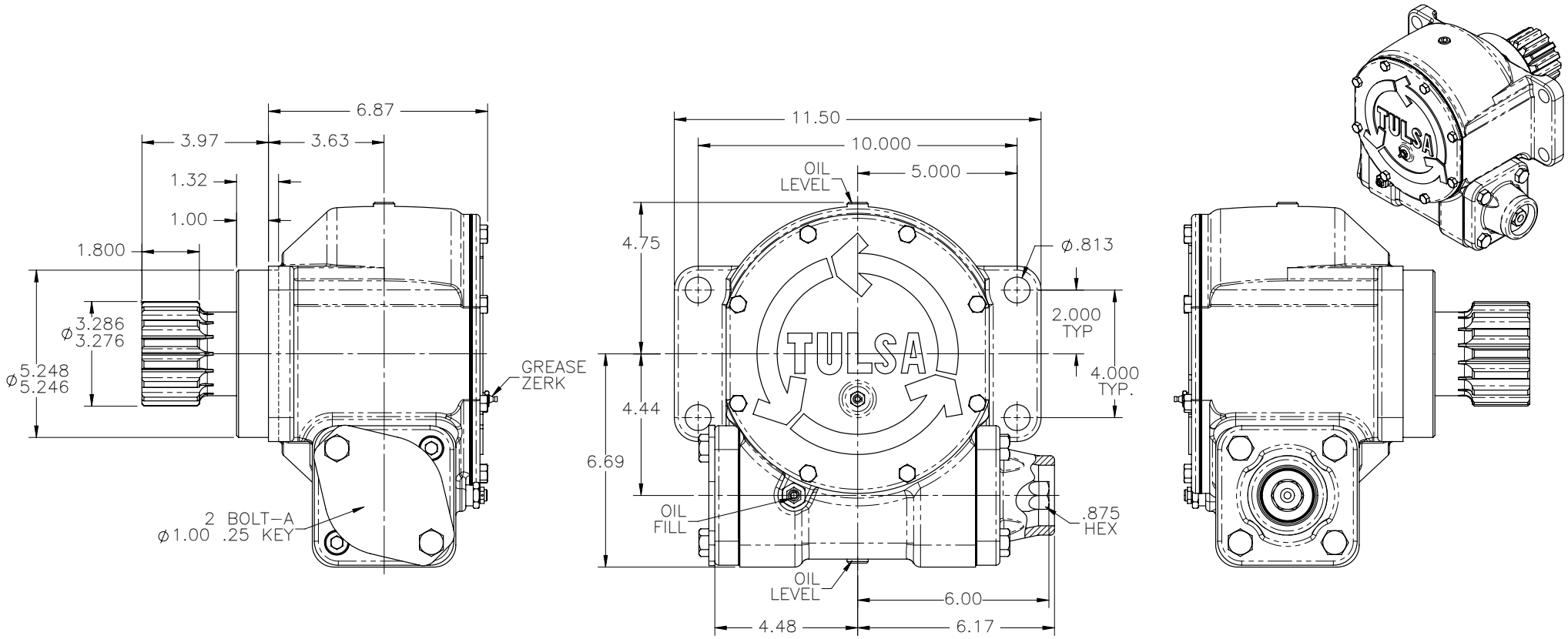

PART #: 82273

HFG2030

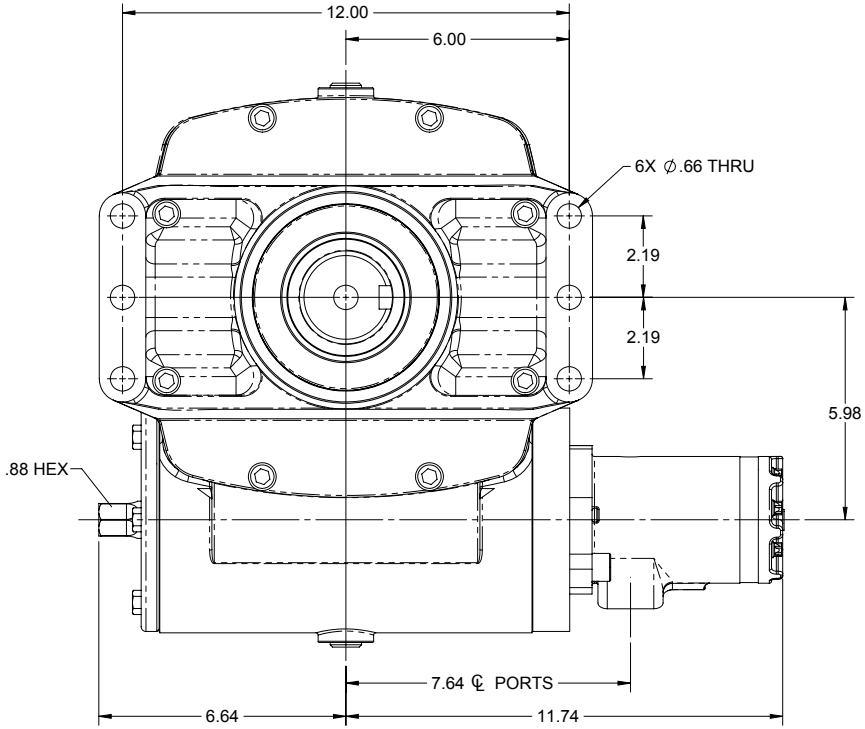

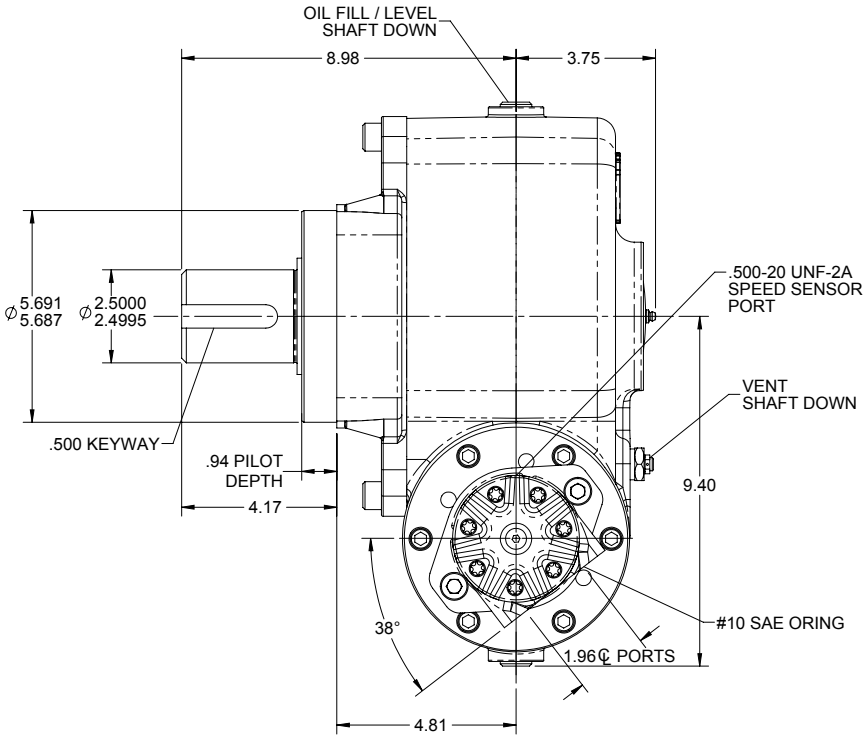

PART #: 80589001