180-00001-1

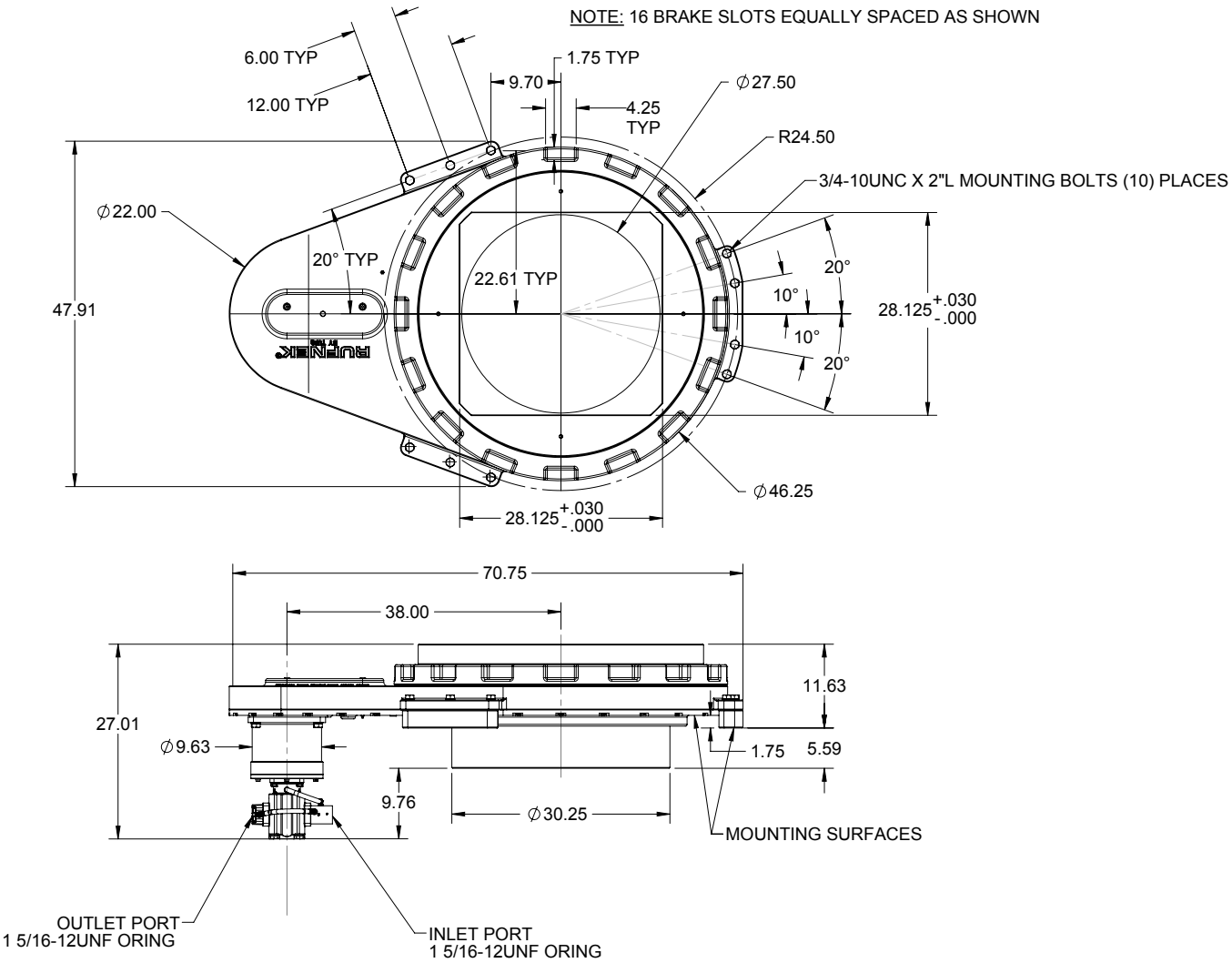
NOTE: 16 BRAKE SLOTS EQUALLY SPACED AS SHOWN
6.00 TYP
12.00 TYP
1.75 TYP
9.70
4.25 TYP
∅27.50
R24.50
3/4-10UNC X 2"L MOUNTING BOLTS (10) PLACES
∅22.00
20° TYP
22.61 TYP
47.91
20°
10°
10°
20°
28.125 +.030 -.000
∅46.25
28.125 +.030 -.000
70.75
38.00
11.63
27.01
∅9.63
1.75
5.59
9.76
∅30.25
MOUNTING SURFACES
OUTLET PORT
1 5/16-12UNF ORING
INLET PORT
1 5/16-12UNF ORING

180-00002-1

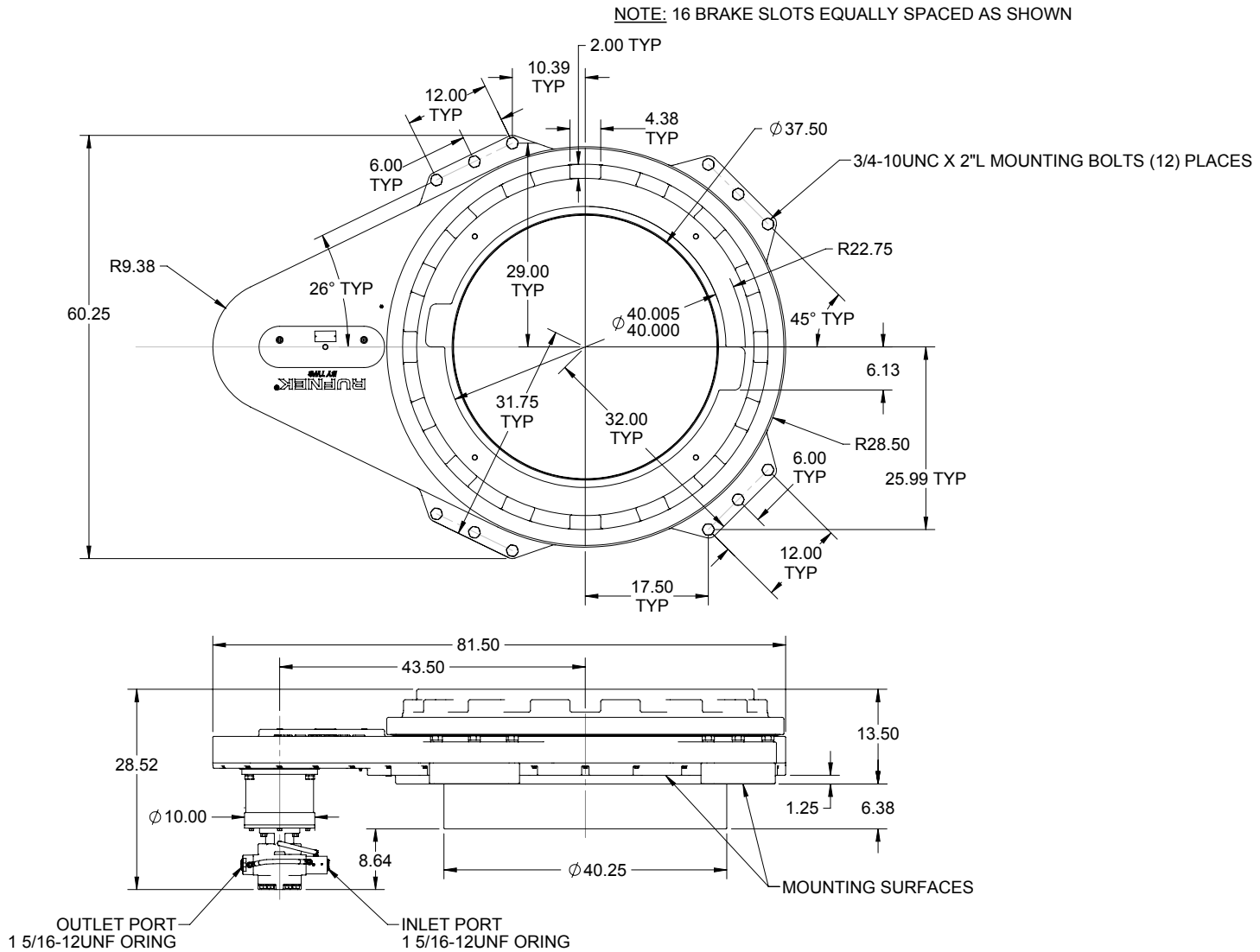
NOTE: 16 BRAKE SLOTS EQUALLY SPACED AS SHOWN
2.00 TYP
10.39 TYP
12.00 TYP
4.38 TYP
∅37.50
3/4-10UNC X 2"L MOUNTING BOLTS (12) PLACES
6.00 TYP
R22.75
R9.38
26° TYP
29.00 TYP
60.25
∅40.005 40.000
45° TYP
6.13
31.75 TYP
32.00 TYP
R28.50
6.00 TYP
25.99 TYP
12.00 TYP
17.50 TYP
81.50
43.50
13.50
28.52
1.25
6.38
∅10.00
8.64
∅40.25
MOUNTING SURFACES
OUTLET PORT
1 5/16-12UNF ORING
INLET PORT
1 5/16-12UNF ORING